Resin-case Proximity Sensor

E2F

Proximity Sensor with Resin Case with Superb Water Resistance

- IP68 protection.
- Models with different frequencies also available.

Be sure to read *Safety Precautions* on page 5.

Ordering Information

Sensors

Model		Sensing distance	Output configuration	Model: Operation mode NO	Model: Operation mode NC
Shielded	M8	1.5 mm	DC 3-wire, NPN	**E2F-X1R5E1**	**E2F-X1R5E2**
			AC 2-wire	**E2F-X1R5Y1**	**E2F-X1R5Y2**
	M12	2 mm	DC 3-wire, NPN	**E2F-X2E1** *1	**E2F-X2E2** *1
			AC 2-wire	**E2F-X2Y1** *1	**E2F-X2Y2** *1
	M18	5 mm	DC 3-wire, NPN	**E2F-X5E1** *1	**E2F-X5E2** *1
			AC 2-wire	**E2F-X5Y1** *1 *2	**E2F-X5Y2** *1 *2
	M30	10 mm	DC 3-wire, NPN	**E2F-X10E1** *1	**E2F-X10E2** *1
			AC 2-wire	**E2F-X10Y1** *1 *2	**E2F-X10Y2** *1 *2

*1. Models with different frequencies are also available. The model numbers are E2F-X□□□5 (e.g., E2F-X5E15).
*2. Models are also available with short-circuit protection. The model numbers are E2F-X□Y□-53 (e.g., E2F-X5Y1-53).
The power supply voltage, however, is 100 to 120 VAC.

Accessories (Order Separately)

Protective Covers

Ratings and Specifications

Item \ Model		E2F-X1R5E□ E2F-X1R5Y□	E2F-X2E□ E2F-X2Y□	E2F-X5E□ E2F-X5Y□	E2F-X10E□ E2F-X10Y□
Sensing distance		1.5 mm ±10%	2 mm ±10%	5 mm ±10%	10 mm ±10%
Set distance		0 to 1.2 mm	0 to 1.6 mm	0 to 4 mm	0 to 8 mm
Differential travel		10% max. of sensing distance			
Detectable object		Ferrous metal (The sensing distance decreases with non-ferrous metal. Refer to *Engineering Data* on page 3.)			
Standard sensing object		Iron, 8 × 8 × 1 mm	Iron, 12 × 12 × 1 mm	Iron, 18 × 18 × 1 mm	Iron, 30 × 30 × 1 mm
Response frequency *1		E Models: 2 kHz, Y Models: 25 Hz	E Models: 1.5 kHz, Y Models: 25 Hz	E Models: 600 Hz, Y Models: 25 Hz	E Models: 400 Hz, Y Models: 25 Hz
Power supply voltage (operating voltage range)		E Models: 12 to 24 VDC (10 to 30 VDC), ripple (p-p): 10% max. Y Models: 24 to 240 VAC (20 to 264 VAC)			
Current consumption		E Models: 17 mA max.			
Leakage current		Y Models: 1.7 mA max. at 200 VAC (Refer to *Engineering Data* on page 3.)			
Control output	**Load current**	E Models: 200 mA max. Y Models: 5 to 100 mA		E Models: 200 mA max. Y Models: 5 to 300 mA	
	Residual voltage	E Models: 2 V max. (Load current: 200 mA, Cable length: 2 m) Y Models: Refer to *Engineering Data* on page 4.			
Indicators		E Models: Detection indicator (red) Y Models: Operation indicator (red)			
Operation mode (with sensing object approaching)		E1/Y1 Models: NO E2/Y2 Models: NC Refer to the timing charts under *I/O Circuit Diagrams* on page 4 for details.			
Protection circuits		E Models: Reverse polarity protection, Load short-circuit protection, Surge suppressor; Y Models: None			
Ambient temperature range		Operating/Storage: –25 to 70°C (with no icing or condensation)			
Ambient humidity range		Operating/Storage: 35% to 95%			
Temperature influence		±10% max. of sensing distance at 23°C in the temperature range of –25 to 70°C			
Voltage influence		E Models: ±2.5% max. of sensing distance at rated voltage in rated voltage ±15% range Y Models: ±1% max. of sensing distance at rated voltage in rated voltage ±10% range			
Insulation resistance		50 MΩ min. (at 500 VDC) between current-carrying parts and case			
Dielectric strength		E Models: 1,000 VAC, 50/60 Hz for 1 min between current-carrying parts and case Y Models: (M8 Models): 2,000 VAC, 50/60 Hz for 1 min between current-carrying parts and case (Other M8 Models): 4,000 VAC, 50/60 Hz for 1 min between current-carrying parts and case			
Vibration resistance		Destruction: 10 to 55 Hz, 1.5-mm double amplitude for 2 hours each in X, Y, and Z directions			
Shock resistance		Destruction: 1,000 m/s^2 10 times each in X, Y, and Z directions			
Degree of protection		IEC 60529 IP68, in-house standards: oil-resistant			
Connection method		Pre-wired Models (Standard cable length: 2 m)			
Weight (packed state)		Approx. 40 g	Approx. 50 g	Approx. 130 g	Approx. 170 g
Materials	**Case**	Polyarylate resin			
	Sensing surface				
	Clamping nuts	Polyacetal			
Accessories		Instruction manual			

*1. The response frequency is an average value. Measurement conditions are as follows: standard sensing object, a distance of twice the standard sensing object, and a set distance of half the sensing distance.
*2. When using the Sensor in environments subject to splashing cutting oil, deterioration may result due to the additives in the oil. The E2E is recommended in such environments.

OMRON Test Method

Usage conditions: 10 m or less under water in natural conditions
1. No water ingress after 1 hour under water at 2 atmospheres of pressure.
2. Sensing distance and insulation resistance specifications must be met after 20 repetitions of 1 hour in 0°C water and 1 hour in 70°C water.

Residual Output Voltage

E2F-X□Y□ at 24 VAC

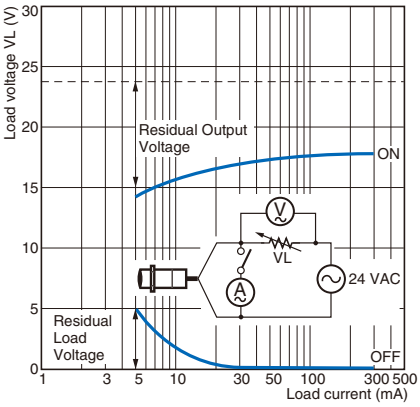

E2F-X□Y□ at 100 VAC

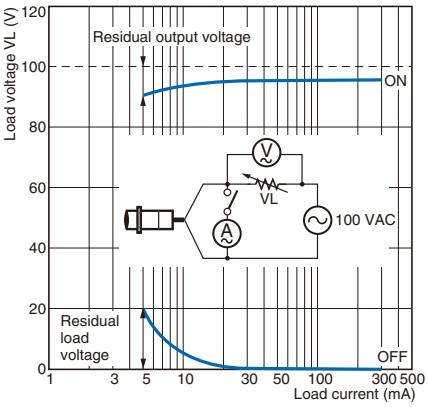

E2F-X□Y□ at 200 VAC

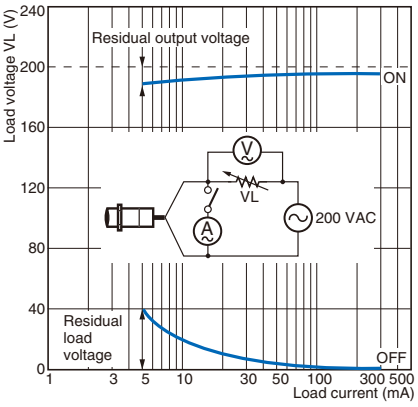

I/O Circuit Diagrams

Output configuration	Operation mode	Model	Timing chart	Output circuit
DC 3-wire	NO	E2F-X1R5E1 E2F-X2E1 E2F-X5E1 E2F-X10E1	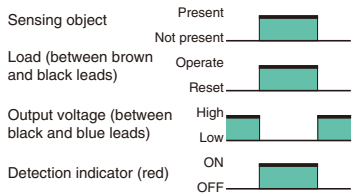	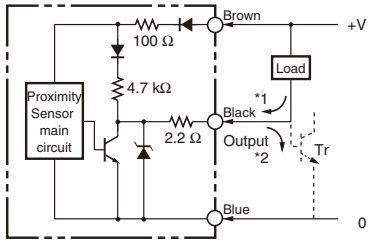 *1. Load current: 200 mA max. *2. When a transistor is connected.
	NC	E2F-X1R5E2 E2F-X2E2 E2F-X5E2 E2F-X10E2	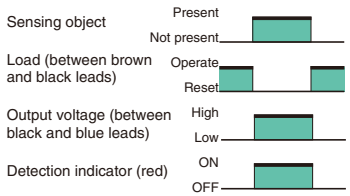	
AC 2-wire	NO	E2F-X1R5Y1 E2F-X2Y1 E2F-X5Y1 E2F-X10Y1	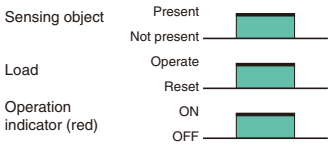	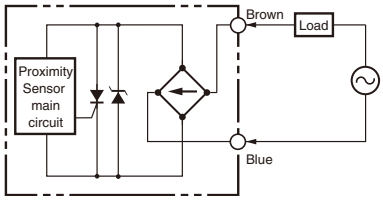
	NC	E2F-X1R5Y2 E2F-X2Y2 E2F-X5Y2 E2F-X10Y2	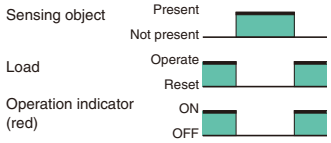	

Dimensions

(Unit: mm)

DC 3-Wire Models

E2F-X1R5E□

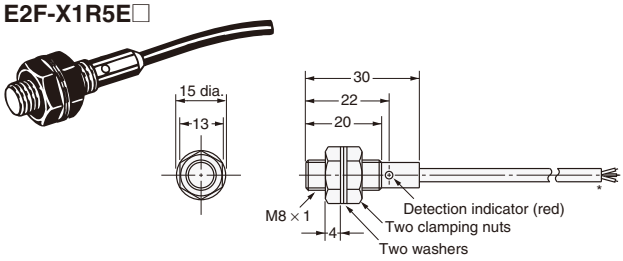

* 3.5-dia. vinyl-insulated round cable with 3 conductors (Conductor cross section: 0.14 mm², Insulator diameter: 1 mm), Standard length: 2 m

E2F-X2E□

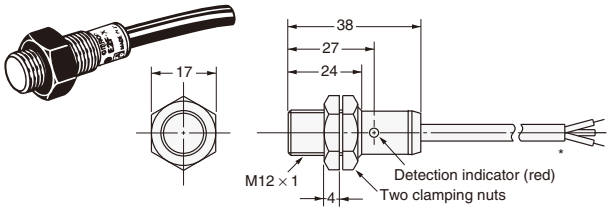

* 6-dia. vinyl-insulated round cable with 3 conductors (Conductor cross section: 0.5 mm², Insulator diameter: 1.9 mm), Standard length: 2 m
The cable can be extended up to 200 m (separate metal conduit).

E2F-X5E□

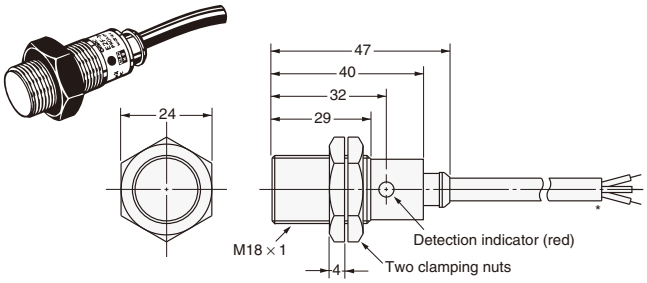

* 6-dia. vinyl-insulated round cable with 3 conductors (Conductor cross section: 0.5 mm², Insulator diameter: 1.9 mm), Standard length: 2 m
The cable can be extended up to 200 m (separate metal conduit).

E2F-X10E□

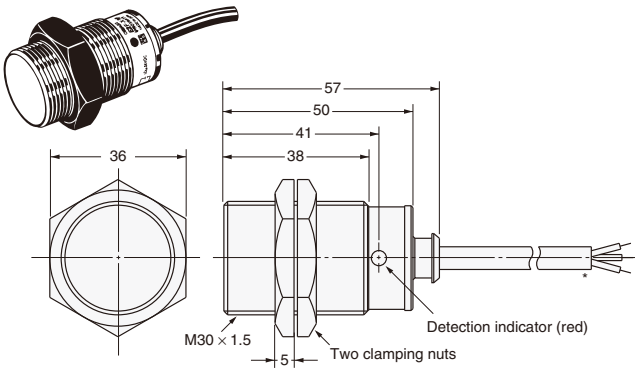

* 6-dia. vinyl-insulated round cable with 3 conductors (Conductor cross section: 0.5 mm², Insulator diameter: 1.9 mm), Standard length: 2 m
The cable can be extended up to 200 m (separate metal conduit).

AC 2-Wire Models

E2F-X1R5Y□

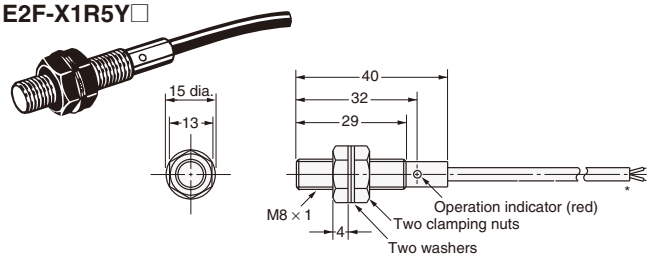

* 3.5-dia. vinyl-insulated round cable with 2 conductors (Conductor cross section: 0.14 mm², Insulator diameter: 1 mm), Standard length: 2 m

E2F-X2Y□

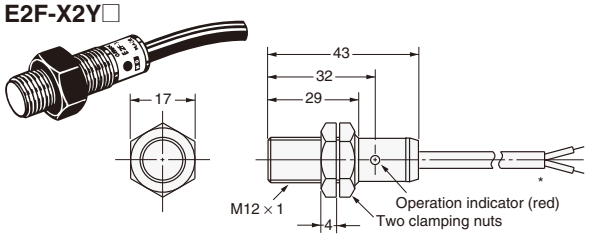

* 6-dia. vinyl-insulated round cable with 2 conductors (Conductor cross section: 0.5 mm², Insulator diameter: 1.9 mm), Standard length: 2 m
The cable can be extended up to 200 m (separate metal conduit).

E2F-X5Y□

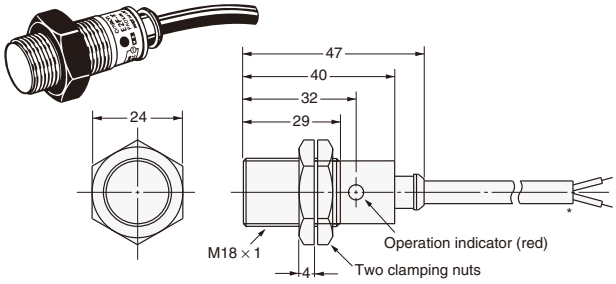

* 6-dia. vinyl-insulated round cable with 2 conductors (Conductor cross section: 0.5 mm², Insulator diameter: 1.9 mm), Standard length: 2 m
The cable can be extended up to 200 m (separate metal conduit).

E2F-X10Y□

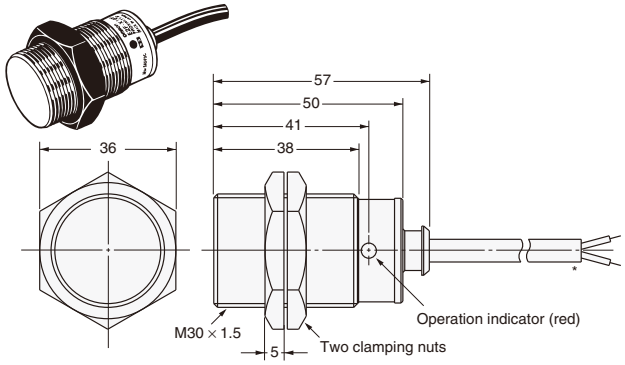

* 6-dia. vinyl-insulated round cable with 2 conductors (Conductor cross section: 0.5 mm², Insulator diameter: 1.9 mm), Standard length: 2 m
The cable can be extended up to 200 m (separate metal conduit).

Mounting Hole Dimensions

Model	E2F-X1R5□□	E2F-X2□□	E2F-X5□□	E2F-X10□□
F (mm)	$8.5^{+0.5}_{0}$ dia.	$12.5^{+0.5}_{0}$ dia.	$18.5^{+0.5}_{0}$ dia.	$30.5^{+0.5}_{0}$ dia.